# DS-2CD2955FWD-I(S)
# 5 MP Network Fisheye Camera

## Key Features

- Up to 5 megapixel high resolution
- 2560×1920 @30fps
- H.265, H.265+, H.264+, H.264
- Support 14 display modes
- FOV: horizontal field of view 180°, vertical field of view 180°
- Dual video streams
- Digital Noise Reduction
- Support on-board storage, up to 128 G
- DC12V & PoE (802.3af)
- Up to 8 m IR range
- -S: Audio/Alarm IO
- Mobile Monitoring via Hik-Connect or iVMS-4500

# Specification

| | |
|---|---|
| ***Camera*** | |
| Image Sensor | 1/2.5" Progressive Scan CMOS |
| Min. Illumination | Color: 0.01Lux @ (F1.2, AGC ON), 0 Lux with IR on |
| Shutter Speed | 1/3 s to 1/100,000 s |
| Lens | 1.05 mm @ F2.2, horizontal field of view: 180°, vertical field of view: 180° |
| Lens Mount | M12 |
| Day &Night | IR cult filter with auto switch |
| DNR | 3D DNR |
| Wide Dynamic Range | 120 dB |
| ***Compression Standard*** | |
| Video Compression | Main stream: H.265/H.264<br>Sub stream: H.265/H.264/MJPEG |
| H.264 Type | Main Profile/High Profile |
| H.264+ | Support |
| H.265 Type | Main Profile |
| H.265+ | Support |
| Video Bit Rate | 32 Kbps to 16 Mbps |
| Audio Compression (-S) | G.711/G.722.1/G.726/MP2L2 |
| Audio Bit Rate (-S) | 64Kbps(G.711)/16Kbps(G.722.1)/16Kbps(G.726)/32-128Kbps(MP2L2) |
| ***Image*** | |
| Max. Resolution | 2560 × 1920 |
| Main Stream<br>Max. Frame Rate | 50Hz: 25fps (2560 × 1920, 2048 × 1536, 1280 × 960)<br>60Hz: 30fps (2560 × 1920, 2048 × 1536, 1280 × 960) |
| Sub Stream<br>Max. Frame Rate | 50Hz: 25fps (352× 288, 704 × 576)<br>60Hz: 30fps (352 × 240, 704 × 576) |
| Image Settings | Saturation, brightness, contrast, and sharpness are adjustable via client software or web browser |
| Image Enhancement | WDR/3D DNR/Backlight Compensation/Defog |
| Day/Night Switch | Auto/Schedule/Triggered by Alarm In (-S model supports) |
| Region of Interest | Support 1 fixed region for each stream |
| Lens Distortion Correction | Support |
| Target Cropping | Support |
| ***Live View Display*** | |
| Mount Type | Support table, wall, and ceiling |
| Display Mode | Support 14 display modes in total (including display modes of different mount types):<br>Fisheye View, 180 Panorama View, 4PTZ, Fisheye + 3PTZ, 360 Panorama View, 360 Panorama + PTZ, 360 Panorama + 3PTZ, 360 Panorama + 6PTZ, 360 Panorama + 8PTZ, 2PTZ, Fisheye + 8PTZ, Panorama View, Panorama + 3PTZ, Panorama + 8PTZ |
| ***Audio (-S)*** | |
| Environment Noise Filtering | Support |
| Audio I/O | Support |
| Sampling Rate | Max. 48kHz |
| ***Network*** | |
| Network Storage | NAS (Support NFS,SMB/CIFS), built-in microSD/SDHC/SDXC card slot, up to 128 G, ANR |

| | |
|---|---|
| Alarm Trigger | Video tampering alarm, HDD full, HDD error, network disconnected, IP address conflicted, illegal login |
| Detection | Motion detection, dynamic analysis, intrusion detection, line crossing detection |
| Protocols | TCP/IP, ICMP, HTTP, HTTPS, FTP, DHCP, DNS, DDNS, RTP, RTSP, RTCP, PPPoE, NTP, UPnP, SMTP, SNMP, IGMP, 802.1X, QoS, IPv6 |
| Standard | ONVIF (PROFILE S, PROFILE G), PSIA, CGI, ISAPI |
| General Function | One-key reset, anti-flicker, fassword protection, privacy mask, IP Address filtering, heartbeat, watermark |
| ***Interface*** | |
| Communication Interface | 1 RJ45 10M/100M self-adaptive Ethernet port |
| Audio (-S) | 1 audio input (line in), 1 audio output interface |
| Alarm (-S) | 1 alarm input, 1 alarm output (DC24V, 1A or AC110V, 500mA, max.) |
| On-board Storage | Built-in microSD/SDHC/SDXC slot, up to 128 G |
| ***General*** | |
| Operating Conditions | -10 °C to +50 °C (-14 °F to +122 °F), Humidity 95% or less (non-condensing) |
| Power Supply | DC 12V ± 25%, 2A, 5W<br>PoE(802.3af 36-57V, class 3), 0.4 – 0.7 A, 6.7W |
| IR Range | Up to 8 m |
| Dimensions | Φ 119.9 × 41.2 mm (Φ 4.72″ × 1.62″) |
| Weight | 600 g (1.32 lbs.) |

## Available Models

DS-2CD2955FWD-I, DS-2CD2955FWD-IS

*With –S model: supports 1 audio input, 1 audio output, 1 alarm input, 1 alarm output.*

## Dimensions

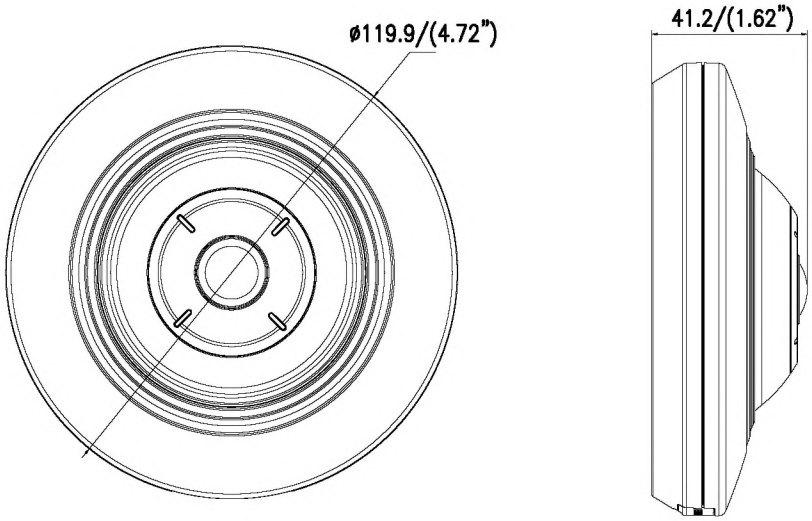


Unit: mm(inch)

## Accessories

DS-1294ZJ
Wall mount

DS-1281ZJ-DM27
Inclined ceiling mount

DS-1297ZJ
Pendant mount
(extendable)

DS-1299ZJ
Pendant mount